BOOSTRAL 7720

Segmentable optical node 1x2, 2 active outputs, 1.2 GHz / 200 MHz

VECTOR TECHNOLOGIES

FORWARD PARAMETERS

Wavelength	1260 - 1620 nm
Bandwidth	85…258 - 1218 MHz
Optical input power range	-9.9 - 2 dBm
Optical AGC range	-7 - 0 dBm
Flatness [1]	±0.5 dB
Equivalent Input Noise Current [2]	5 pA / √Hz
Output level: [3] CTB ≤ -60 dBc CSO ≤ -60 dBc	 2 x 117 dBµV 2 x 119 dBµV
Umax [4]	2 x 112 dBµV
Gain limited output level [5]	2 x 119 dBµV
Number of outputs	2 active

RETURN PARAMETERS

Bandwidth	5 - 65 … 204 MHz
Flatness [6]	±0.5 dB
Optical output power [7]	3 or 6 dBm ± 0.5 dB
Min RF input level to get 10% OMI [8]	70 dBµV
NPR / Dynamic range [9]	40 dB / 5 dB

OTHERS

Return loss [10]	> 18 dB
AC voltage range: remote powering	30 - 65 V AC
Max. current for RF / AC IN ports	10 / 15 A
Power consumption [11]	< 46 W
Operation temperature range	-40 - 60 °C
Optical connectors	SC / APC
RF connectors	2 x PG11
Protection class	IP 67
Dimensions (W x L x H)	255 x 234 x 128 mm
Weight	< 4.0 kg

AVAILABLE VERSIONS

BOOSTRAL 7720 489Y	remote powering; max. config: 1Rx x 2Tx

1.2 GHz technology
An extended bandwidth in downstream up to 1.2 GHz; DOCSIS 3.1 standard compliant

200 MHz technology
A possibility of extending bandwidth in upstream up to 200 MHz

GaN Technology
The Output parameters for analog and digital carriers improved for lower power consumption

Electronic control
A quick and uninterrupted device configuration

VMC (VECTOR Mobile Commander)
Convenient and user-friendly configuration through mobile devices

Electronic adjustment
Easy configuration by using buttons and LED Indicator

NMS transponder
Reduced operating costs thanks to the remote monitoring and configuration

VIG (VECTOR Ingress Guard)
System compliant; Verification and elimination of the source of ingress in the network

Integration of optical passives
A possibility of installing CWDM / DWDM / WDM filters inside the housing

GREEN mode
A significant reduction of power use thanks to optimization of its consumption

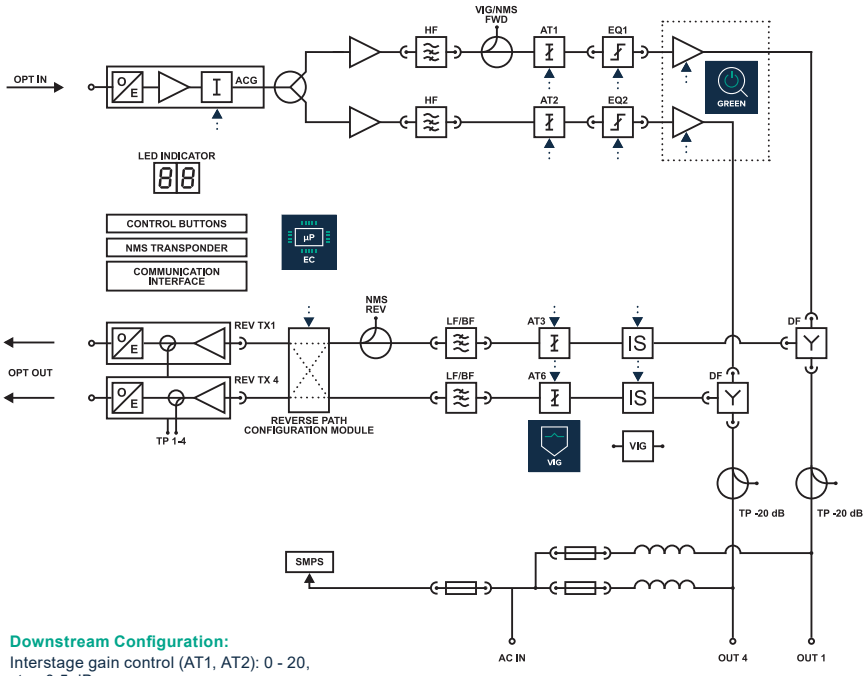

Downstream Configuration:
Interstage gain control (AT1, AT2): 0 - 20, step 0.5 dB
Interstage slope control (EQ1, EQ2): 0 - 20, step 0.5 dB

Upstream Configuration:
Input gain control (AT3, AT4): 0 - 20, step 0.5 dB
Ingress switches: 0, -6, -∞ dB

1. In range 85 - 600 MHz; ± 0.75 dB in range 600 - 1006 MHz; ± 1.0 dB in range 1006 - 1218 MHz
2. Typical value; the worst case 6 pA / √Hz
3. According to EN 50083-3, 9 dB slope between 85 to 862 MHz, 42 channels CENELEC, typ. value
4. Full digital load 258 - 1218 MHz, 110 channels QAM 256, 12 dB slope
5. AGC on, 3.25% OMI, -7 dBm optical input level, 1310 nm
6. Up to 85 MHz; ± 0.75 dB up to 204 MHz
7. For CWDM lasers, up to 16 wavelengths are available in 3 dBm version and 8 wavelengths are available in 6 dB version
8. With AT3, AT4 = 0 dB regardless of US configuration
9. Measured with 12dB link (15 km fiber + loss), 60MHz BW noise load, EINC 7pA / √Hz
10. In 5 - 65 MHz; 18 dB for f < 40 MHz; 18 dB -1.5 dB / oct for f > 40 MHz, but > 11 dB
11. 50V AC; Configuration: 1 x FWD Rx, 2 x 6 dBm CWDM lasers, EDCM

Unless otherwise specified, the whole specifications are tested with 65 / 85 diplex filters installed; at room temperature 25°C and present typical values.